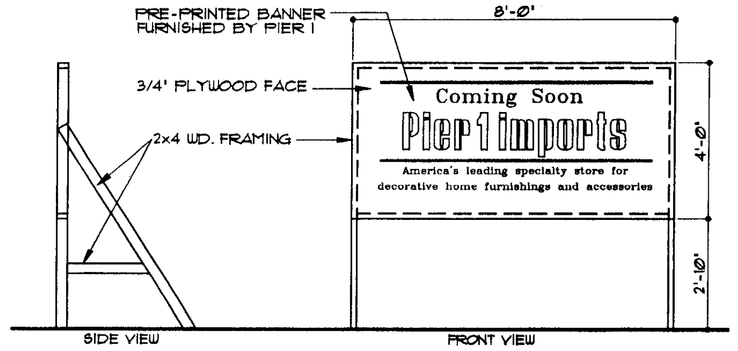

PIER 1 IMPORTS WILL FURNISH TO THE GENERAL CONTRACTOR A PRE-PAINTED BANNER AS SHOWN ABOVE. THE CONTRACTOR IS RESPONSIBLE FOR AFFIXING IT TO A PLYWOOD BACKBOARD AND ATTACHING IT TO SUPPORTS AS DETAILED. FOR FURTHER INFORMATION REGARDING THIS SIGN PLEASE CONTACT: PIER 1 IMPORTS SIGNAGE DEPT. (817) 252-7636

02 ANNOUNCEMENT SIGN

SCALE: 3/8" = 1'-0" EL006

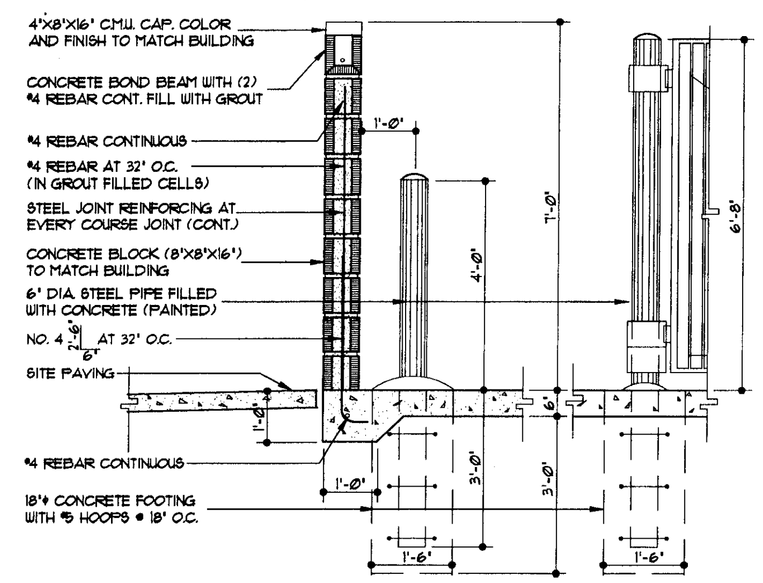

03 SECT AT DUMPSTER/BOLLARD

SCALE: 1/2" = 1'-0" SC004

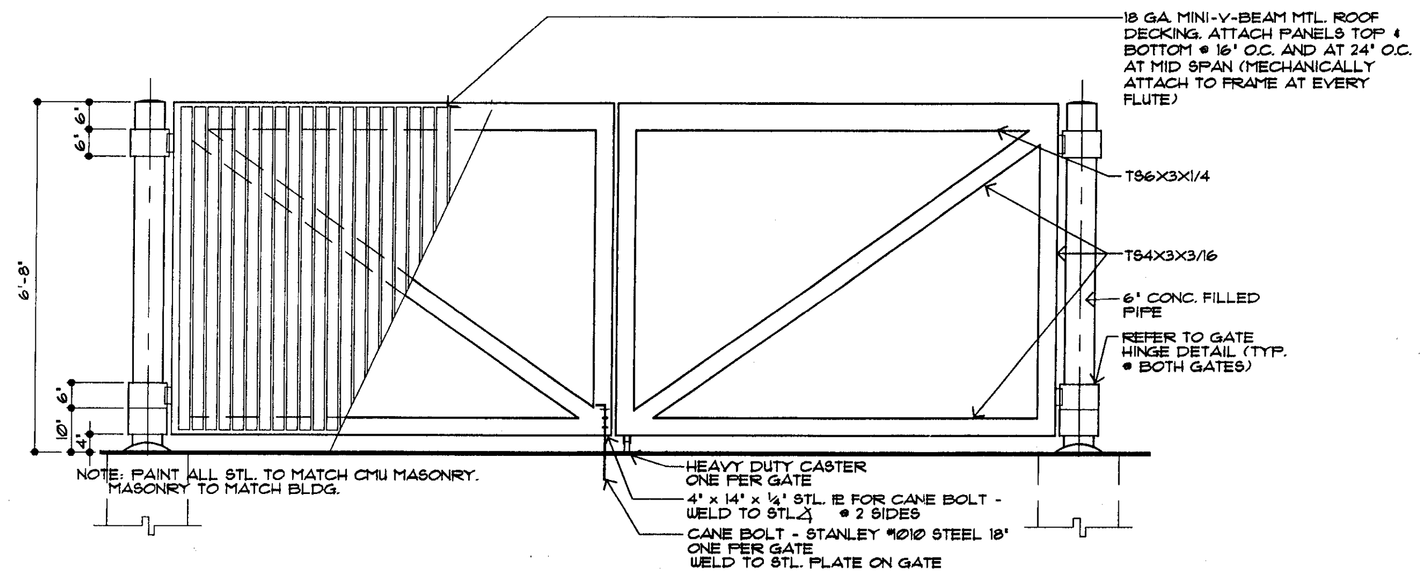

04 ELEVATION - DUMPSTER ENCLOSURE

SCALE: 1/2" = 1'-0" EL008

NOTE: DUMPSTER FINISHES SHALL MATCH SHOPPING CENTER FINISHES.

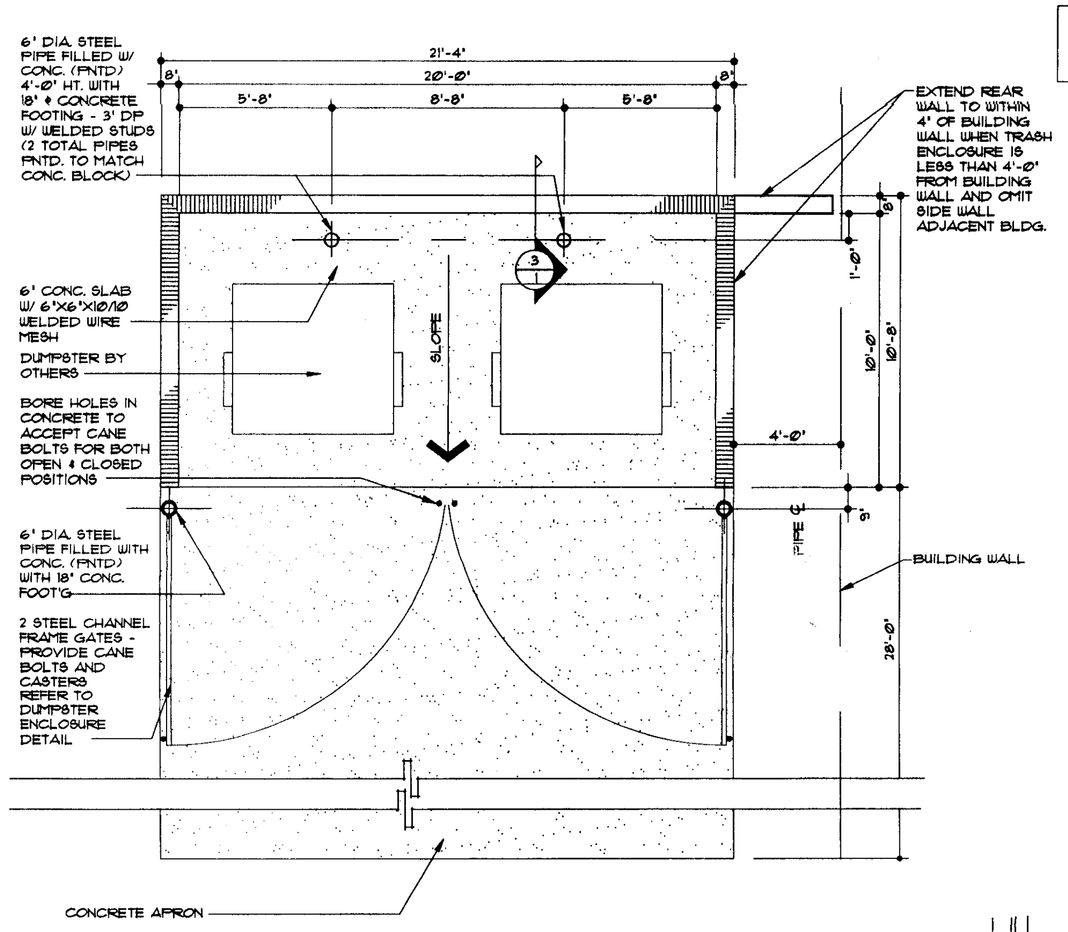

05 TRASH ENCLOSURE

1/4" = 1'-0" PD007

Pier 1 imports

BUILDING AREA 9,460 S.F.

GENERAL NOTES

1. SHRUBS AND TREES SHALL BE INSTALLED SO THAT SPECIES, AT MATURITY, WILL NOT BLOCK SIGNAGE OR STORE FRONT.
2. LANDSCAPING, IF SHOWN, IS FOR REFERENCE ONLY. ACTUAL LANDSCAPING SHALL COMPLY WITH ALL APPLICABLE CODES & ORDINANCES.

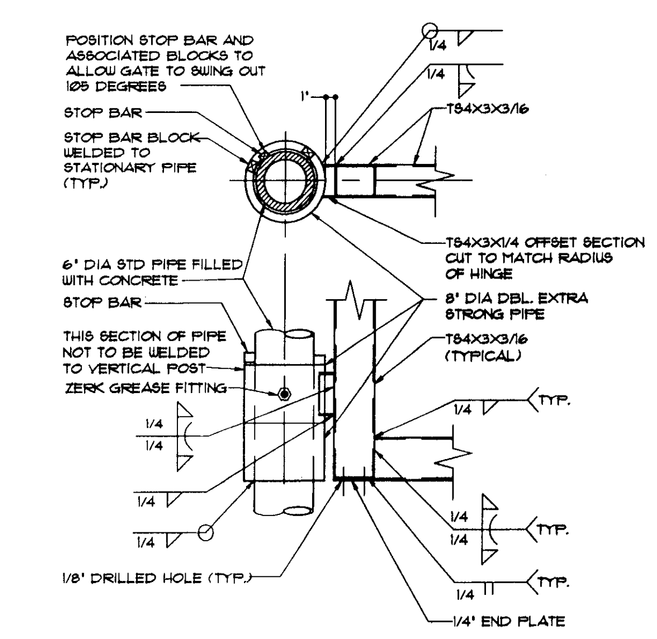

06 GATE HINGE DETAIL

SCALE: N.T.S. DG007B

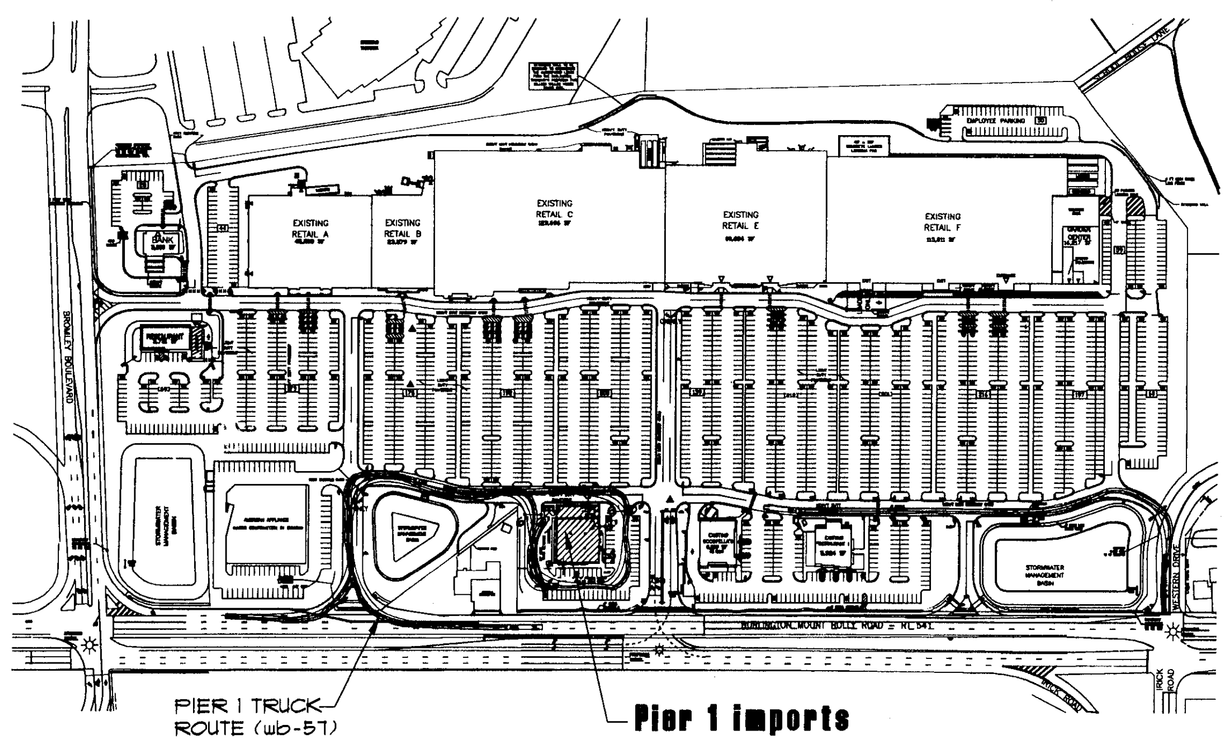

NORTH

07 OVERALL SITE PLAN

N.T.S.

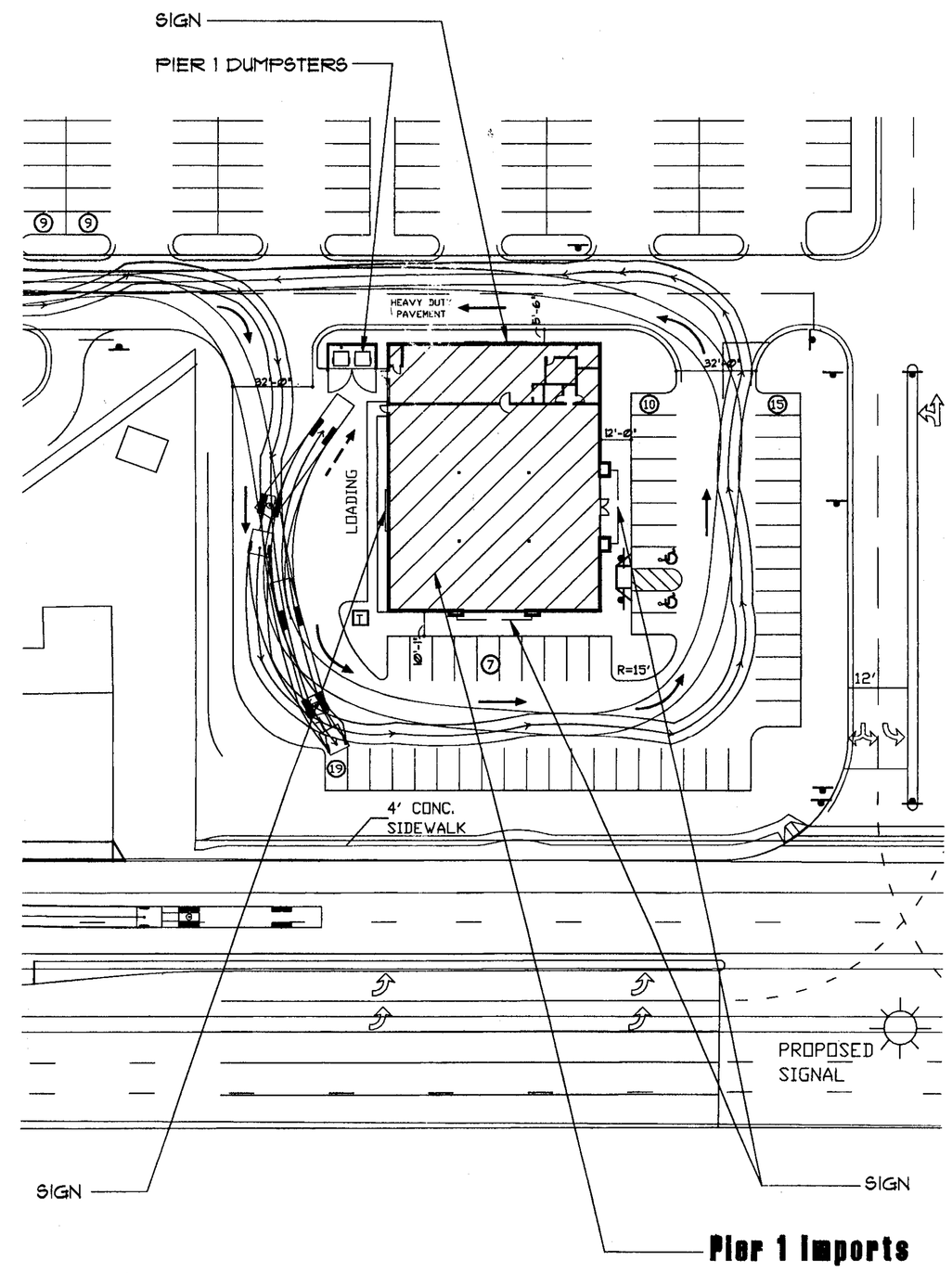

NORTH

01 SITE PLAN

SCALE: 1" = 40'

PIER 1 APPROVAL 4/09/03
REVISIONS

LANDLORD APPROVAL 4/7/03
REVISIONS

Pier 1 imports
301 COMMERCE STREET SUITE 600 FORT WORTH, TEXAS 76102-4980

PROGRAM DOCUMENTS
NOT FOR CONSTRUCTION

Burlington, NJ

SITE PLAN AND DETAILS

DRAWN: CAB
CHECKED:
DATE: 04-01-03

1
OF 9 SHEETS
EXHIBIT D